Excellence in economics in Russia

NES New Economic School

Sergey Ilchenko

The Role of Uncertainty in Liquidity Breakdown

Working Paper # BSP/2008/098

This paper is based on the Master Thesis prepared at NES in 2007 in the framework of the research project “Topics in Portfolio Choice Theory” under the supervision of prof. Dmitry Makarov (NES)

The research was supported by Ford Foundation, World Bank, John D. and Catherine T. MacArthur Foundation.

The author would like to thank his academic advisors, Markus Knell, and all the participants of XXII NES research conference.

Moscow
2008

Ilchenko Sergey. The Role of Uncertainty in Liquidity Breakdown / Working Paper # BSP/2008/098 – Moscow, New Economic School, 2008. – 22 p. (Engl.)

When an economy is exposed to severe financial crises, agents are not able to fairly determine the probabilities of possible evolution of events. In this case they act as if the worst case resolves, that evolves in flight to quality episodes and market breakdown. Thus, treating the ambiguity as Knightian, I present the model of crises in liquidity markets that justifies actions of the central bank as a lender of last resort and prove that it is able to reduce the distortion of withdrawal plan without bearing any additional costs. The necessary conditions for distortion to occur are insufficient liquidity in the economy and even partial ambiguity among agents.

Key words: Knightian uncertainty, ambiguity, flight to quality, market breakdown, lender of last resort, insufficient liquidity

Ильченко С.А. Рост неопределенности в кризисах ликвидности / Препринт # BSP/2008/098 - М.: Российская Экономическая Школа, 2008. – 22 с. (Англ.)

Когда в экономике случается финансовый кризис, финансовые агенты не способны адекватно определять вероятности возможного развития событий. В этом случае они действуют, как если бы реализовался самый неблагоприятный случай, что приводит к побегу в качество и исчезновению рынка ликвидности. В данной работе модель кризисов ликвидности основывается на предположении, что неопределенность трактуется по Найту. Также оправдываются действия центрального банка как кредитора последней инстанции, и показывается, что этот финансовый регулятор действительно способен уменьшить искажения в потреблении ликвидности, при этом не неся издержек. Необходимыми условиями для возникновения этих искажений являются недостаточный агрегированный уровень ликвидности в экономике и частичная неопределенность у экономических агентов.

Ключевые слова: неопределенность по Найту, побег в качество, кризис ликвидности, кредитор последней инстанции, недостаточный уровень ликвидности

ISBN

Contents

1 Introduction

Financial crises attracted great attention of economists because of their severity and economic consequences. The financial system that consists basically of liquidity providers, consumers and intermediaries, sometimes may fail to operate. Mean losses for the economy, that a crisis creates, reach 300% of real GDP per capita in the year before a crisis starts[1]. Financial intermediaries may find themselves insolvent when sudden liquidity shock appears. Nevertheless, the economy is inefficient without them. The risk, that the intermediaries take, is diversified in the market, but the diversification is not perfect because of the market incompleteness and erroneous believed probabilities of states of the nature. The first reason is discussed in Allen and Carletti (2007). The second reason is related to the current paper. The errors in probabilities arise from many factors. Crisis occur rarely and no statistics is applicable. Moreover, each crisis is in fact unique by nature. The financial system becomes more and more complicated and new technologies are introduced over time. These technologies are poorly tested and create new risk. The behavior of people changes when a crisis occurs. Behavioral finance has to do with these issues. Current paper explores the consequences that follow from this behavior rather then the causes that lead to a crisis. As it is mentioned in Caballero and Krishnamurthy (2007), liquidity shock under uncertainty may result in market-wide capital immobility, liquidity hoarding and flight to quality. In this paper I draw attention to interbank market in particular, it's stability and financial contagion. Similar to Caballero and Krishnamurthy (2007), I argue that central bank as a financial regulator is able to lessen the effect of the distortions in terms of social cost.

Not only a crisis may influence human's rationality. Daniel Kahneman, a psychologist, finds an evidence against commonly used basis of rationality and selfishness of economic agents. He developed prospect theory with Amos Tversky that describes a bunch of deviations from generally accepted theory of state dependent utility function. One of the well-known manifestations of deviations is Ellsberg's paradox with urns and balls. There is a gap between economical and psychological views on human behavior. When economists have found little support in the market for their theory, they started to pay attention on this gap. As it is said in Kahneman (2003): "it now appears that the gap between the views in the two disciplines has been permanently narrowed".

A lot of effort has been applied to incorporate psychology specific peculiarities in agents' behavior in financial theory. One of the popular aspects of agents' is ambiguity aversion. Frank Knight discriminated the concepts of risk and uncertainty in his book "Risk, Uncertainty and Profit". Whereas risk can be measured and, hence, insured against, uncertainty is uninsurable. One of possible representations of Knightian uncertainty introduced in Gilboa and Schmeidler (1989) is maxmin, where utility function is minimized over Borel probability measures specified by uncertainty and then maximized over the set of alternatives. Often the minimum is reached at the most unfavorable probability measure. However, this is not generally true. Epstein (2001) considers simple model with exchange economy, two agents, two periods, and

[1] from Allen and Carletti (2007)

Knightian uncertainty over the income in the second period. In Pareto optimal allocation agents will choose the probability measures that are not necessarily the worst for each agent correspondingly. So, one should be careful when maximizing utility functions with Knightian uncertainty. This is the case for the model, that I am going to propose in section 2.

Knightian uncertainty has been applied in asset pricing theory[2]. However, there were little effort in studying the influence of Knightian uncertainty on financial crises. Caballero and Krishnamurthy (2007) introduce the model that incorporates financial risk and uncertainty. However, a bunch of literature has been written prior to this paper. I will discuss briefly several papers that are most related to the area I investigate.

A pioneering model of financial crises was developed by Diamond and Dybvig (1983)[3]. This simple model makes several crucial assumptions that are widely used until now. They are *sequential service constraint* and the fact that banks have monopolistic opportunity to find long-term projects that give positive return. So, the banks as financial intermediaries take the risk to convert short money into long money. Some of depositors find themselves distressed in short-term and need the money back early with some positive interest. The intact agents have the opportunity to withdraw money early as well in order to save and consume later, or just withdraw later with big interest, because *the types of agents are not observable.* Thus, model introduces unpredictable and unstable consumption stream among all agents. The possibility of early withdrawing creates the basis for bad equilibrium when all agents withdraw money in short term. Since the gross interest in short term in greater than unity, not all agents receive money back and some of them are left with nothing. The simplest mechanism to eliminate this bad equilibrium is *suspension of convertibility.* The banks just stop providing liquidity when withdrawals become too numerous. This mechanism fails to work when the number of distressed agents is stochastic. In this case the government deposit insurance may do the work. Insured agents have a right to get money back, but then they will be taxed to balance government budget constraint. In equilibrium no one will use government insurance. However, this mechanism works if everyone believes in government ability to refund the deposits. One should expect that in developing countries the government doesn't have credit enough, and the risk of bank runs becomes the matter of concern. In the model that I am going to discuss in the next section I exploit this argument.

Chang and Velasco (1998) consider the model of Diamond and Dybvig in open economy setup. They study the effects of financial liberalization and the causes of financial fragility. The model replicates the Diamond and Dybvig's where the agents also have limited foreign resources. This additional resources may be spent on investment or saved for a "rainy" day. Agents are also able to make early withdrawal from their deposits in banks at additional costs. Optimally, when agents have enough liquidity, no one will make early withdrawals. However, this is only one of two possible equilibria. In the second equilibrium, which is called bank run, all agent withdraw their deposits from the bank as in Diamond and Dybvig's model. This bad

[2]see, for example, Epstein and Wang (1994)

[3]For detailed survey of literature on financial crises followed Diamond and Dybvig (1983) see Gorton and Winton (2002)

equilibrium may be eliminated by suspension of convertibility mechanism and the requirements of central bank to hold certain amount of liquidity. If these constraints are weakened (financial liberalization), the bank is subject to runs, although the financial intermediation becomes more efficient. I don't pay special attention on bank runs in my model assuming that bank act in such way to prevent possible runs. Another thing that Chang and Velasco highlight is the increasing financial fragility with the size of foreign borrowing. Foreign money are stored for the case of liquidity shock in short-term. If the agents are able to borrow a lot from foreign countries, the part of foreign loan will be invested in long-term projects with the hope to roll over this debt in short-term. However, foreign investors may be afraid of financial crush and would want to refuse to roll over the investment in sort term. This panic among foreign investors is self-fulfilling just as it is discussed by Diamond and Dybvig. If agents are not able to borrow a lot, there is nothing to roll over in short-term and the problem disappears. Thus, large foreign borrowing makes financial system dependent on foreign investors sentiment.

Chang and Velasco stress that "excessive" foreign borrowing causes bank runs and currency collapses. The overborrowing is typical for emerging markets when economy's financial needs exceed international financial resources. Quite similar to my model, the agents in Caballero and Krishnamurthy (2004) may become distressed or intact. If distressed, the agents need liquidity that they borrow from outside and from intact agents who also borrow from outside and pass to distressed agents. In that way the additional resources from abroad go to distressed agent, because the types of agents are not observable. Caballero and Krishnamurthy suggest capital inflow sterilization via government bonds as the best solution of overborrowing problem. As a result, agents get additional liquidity in period when shock realizes, and then the government balances its budget by raising taxes in the last period. The actions of central bank in my model are similar to those proposed in Caballero and Krishnamurthy (2004).

The financial fragility as a manifestation of incomplete markets is discussed by Allen and Carletti (2007). They propose an intuition that is based on the relationship between liquidity consumers and providers. There are a lot of states of the nature where consumers need different amount of liquidity. If the market is complete, consumers may perfectly hedge against the uncertainty they face. However, if the market is not complete, consumers may sell their assets to liquidity providers. The latter have opportunity cost to make liquidity provisions. The price of assets in each state is formed to compensate providers' for holding costs over all other unrealized states. Thus, prices are low when the demand for liquidity is high and vice versa. In that way, if market is not complete, the aggregate uncertainty may create large price variability through all the states. In some of these states liquidity providers, which are the banks, may fail to fulfill their liabilities because of low prices of assets. In this case the crisis arise. A contagion is another manifestation of market incompleteness, which is discussed by Allen and Carletti. If the economy consists of several regions with idiosyncratic shocks of liquidity, and trade is possible among the regions, then the crisis in one region may cause the crisis in another region. And a chain reaction arise. Indeed, when the crisis occur in one region, liquidity consumers seek for it in other regions. If the crisis is about to occur in other regions, the launched

crisis in the first region may trigger the crises other regions. Allen and Gale (1998) argue, that partial incompleteness (e.g. closed chain structure of connections between market agents) makes the market more subject to contagion effect. In this paper, authors investigate the effect of systematic liquidity shock that essentially happens with zero probability. Several market structures of trades among agents are considered. For closed chain structured it is shown, that the system is subject to contagion for smaller magnitudes of shocks, that for complete structure (where everyone may trade to everyone). Special attention is drawn to interbank markets, which are well suited for this model.

The model that I am going to propose is closely related to what was suggested by Caballero and Krishnamurthy (2007). I will not discuss the issues that follow from this article, because my model partly repeats those conclusions made by Caballero and Krishnamurthy. However, some assumptions are different. In my case I refuse the possibility of private insurance among agents, because the types of agents are not observable. That is why it is possible for intact agents to pretend to be distressed and borrow money. The last innovation is the partial liability to ambiguity.

The current paper is organized as follows. In section 2 I will present the model setup. In section 3 I consider the case of partial liability to ambiguity. The role of central bank is considered in section 4. Section 5 presents the financial contagion issues. The conclusions are made in section 6.

2 The Model

The basis of the model is taken from Caballero and Krishnamurthy (2007) and Chang and Velasco (2004). It introduces the confusion among agents that appears when the crisis happens. The model does not explain what induces the crisis. However, it assumes that a great enough number of agents may experience liquidity shock in the near future. There are a lot of reasons that can lead to such an event like countrywide risk jump (currency devaluation in Thailand followed by Asian Financial Crisis in 1997), country default (Russia in 1998), disclosure of intrinsic risks of mortgage-backed securities (Subprime Mortgage Crisis in 2007). In each on these examples the crisis spread further on other countries of regions. This phenomena is called financial contagion that has a lot of explanations. One of them is discussed in Allen and Gale (2000). The model introduced here has to deal with another channel of infecting adjacent agents via the uncertainty that agents find themselves in.

2.1 Sequential Shocks and Beliefs

The most peculiar part of the model is the sequential structure of shocks. There are two possible shocks in the model and the second shock won't happen if the first shock didn't take place. The economy is hit by the first wave with probability $\phi(1)$. If that happens, the probability for the second wave to occur is $\phi(2|1)$. Hence, a priori probability of the second

wave is $\phi(2) = \phi(1)\phi(2|1)$. With probability $1 - \phi(1)$ the economy remains intact.

There is a continuum of agents normalized to 1 in the economy. If the first shock happens the half of agents need liquidity. If the economy is exposed to the second shock, then another half of agents need liquidity. This sequential structure implements different severity of crisis in different states of the nature.

Let $\omega \in [0, 1]$ and $\phi_\omega(i) = \frac{\phi(i)}{2}$ is true probability of agent ω to be hit in shock i. Denote $\phi^\omega_\omega(i)$ as agent ω's perception of this probability. Each agent knows for sure the probability to be hit either in the first wave or the second wave: $\phi^\omega_\omega(1) + \phi^\omega_\omega(2) = \phi_\omega(1) + \phi_\omega(2) = \frac{\phi(1)+\phi(2)}{2}$.

As we will show later, sometimes agent prefers to be exposed to the first wave of shock than to the second. Caballero and Krishnamurthy assume that agents may percept incorrectly the probabilities to be exposed to the shocks when they are anxious about being hit early of later. Here the uncertainty is introduced. Denote $\theta^\omega_\omega = \phi^\omega_\omega(2) - \phi_\omega(2)$ (-$\theta^\omega_\omega = \phi^\omega_\omega(1) - \phi_\omega(1)$) as agent ω's mistake. Let $\theta^\omega_\omega \in [-K, K]$ for some $K > 0$. Here K is the parameter for uncertainty measure. If $K = 0$, there is no uncertainty in agents' perceptions. If $K > 0$, agent ω cannot reveal the true probabilities to be hit in either shock, because of lack of information about these infrequent events and treats this uncertainty as Knightian. Parameter K represents the extent of ambiguity in the economy.

2.2 The Interbank Market

We may think of agents as a representative banks of different regions. Each region may urgently need liquidity at some point of time: early or later, or never. There is an interbank liquidity market as mechanism to diversify liquidity risk. Thus, banks may commit to provide liquidity to those agents who need liquidity first. E.g. first distressed bank may receive credit on advantageous terms by selling T-bills. If the second shock happens then new distressed banks receive credit at a worse terms though discount window[4]. If no shock happens, each agent receives R for each dollar it has. Here R is the cost of early consumption.

The setting reminds Diamond and Dybvig's model of the single bank and many depositors. However, I don't assume first come-first served basis here. The strategy is resolved in the first period and there won't be unserved agents. Demand and supply of liquidity are equated ex ante.

However, one should note that interbank market is created to provide liquidity for everyone who needs it irrespective whether an agent actually distressed or not. That means that the market to function well needs to be incentive supported so that only truly distressed agents in the first period receive liquidity. This important feature that is not discussed by Caballero and Krishnamurthy has important consequences discussed later.

[4]the example is adopted from Caballero and Krishnamurthy (2007)

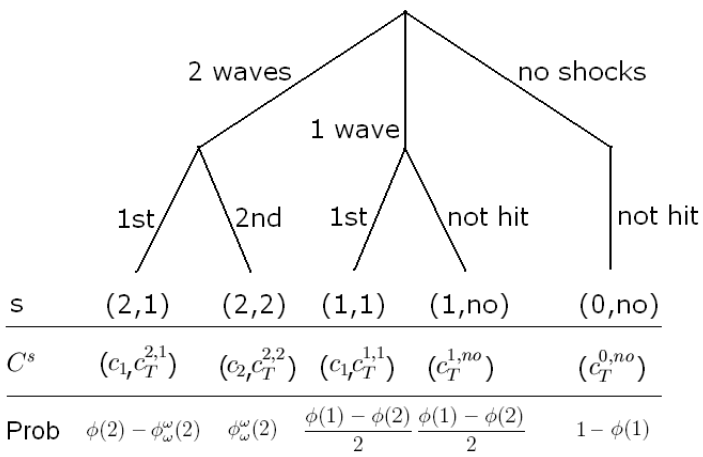

Figure 1. General event tree. The tree denotes all possible scenarios that can resolve for agent ω. s =(number of waves, the shock that hits). C^s denotes the consumption plan. Two wave situation happens with probability $\phi(2)$, one wave with probability $\phi(1) - \phi(2)$ and the economy is intact with probability $1 - \phi(1)$. Agents' perception on probabilities are presented in line Prob.

2.3 Preferences, Endowments, and Budget Constraints

Consequently, there are four periods in the economy: 0, 1, 2 and T. The last one is special in the sense that there cannot be any shocks at that period, the situation is stabilized, and the agents are effectively risk neutral. In periods 1 and 2 the agents are risk averse with utility function $u(c)$ satisfying Inada conditions. Thus, agent ω has utility function is:

$$U^\omega = \alpha_1 u(c_1) + \alpha_2 u(c_2) + \beta c_T.$$

Here $\alpha_i, i = 1, 2$ are random variables that take on values 0 or 1. $\alpha_i = 1$ whenever shock i happens.

Agents maximize expected utility. Denoting C^s as a consumption plan for three periods and state of the nature s, agent ω's problem can be written as follow:

$$\max_{C^s} \min_{\theta_\omega^\omega \in [-K,K]} E_0[U^\omega(C^s)|\theta_\omega^\omega]$$

One should be careful with C^s. Since agents cannot distinguish among two states of nature with one and two waves at the moment when they are hit first, they plan to consume c_1 in the first shock irrespective whether the second shock will occur or not. Each agent has Z units of liquidity. Agent has the right to withdraw certain amount of liquidity at certain moment in the future. The early withdrawal may be costly while the late one gives interest. I neglect the cost of early withdrawal without lost of generality. One may make sure that the answers are the same with scaled parameters β and R.

Since agents' types are not observable, those agents which were not hit in the first wave may pretend to be distressed and withdraw some (d units) liquidity if it is possible. The set of

budget constraints for agents can be written as follow:

$$
\begin{aligned}
l_1 + l_2 &\leq Z \\
\frac{c_1}{2} + \frac{d}{2} &\leq l_1 \\
\frac{c_2}{2} &\leq l_2 + \frac{d}{2} \\
c_T^{1,no} &\leq R(Z - l_1)\gamma_1 + d \\
c_T^{1,1} &\leq R(Z - l_1)(2 - \gamma_1) \\
c_T^{2,1} &\leq R(Z - l_1 - l_2)\gamma_2 \\
c_T^{2,2} &\leq R(Z - l_1 - l_2)(2 - \gamma_2) \\
c_T^{0,no} &\leq RZ \\
c_*^*, d, l_1, l_2 &\geq 0 \\
\gamma_{1,2} &\in [0, 2]
\end{aligned}
$$

Here l_i is the amount of liquidity reserved for consumption in period i. One can see that "stolen" liquidity d can be consumed in period 2 (if second shock realizes) or in period T (if it doesn't). It is obvious that all consumption inequalities (i.e. except for the first and the last row) are held as equalities. In particular, $c_T^{0,no} = RZ$ and one can exclude variable $c_T^{0,no}$ from consideration. Variables γ_1 and γ_2 represent the proportions in which the rest of liquidity for period T is shared among two groups of agents. Notice, that in period 2 it is known which of the agents are really intact or distressed. However, the "stolen" liquidity d stays unshared. The agent's problem can be rewritten as follows (see figure 1 for probabilities):

$$
\begin{aligned}
\max_{C^s} \min_{\theta_\omega^\omega \in [-K,K]} \phi_\omega^\omega(1)u(c_1) + (\phi(2) - \phi_\omega^\omega(2))\beta c_T^{2,1} + \phi_\omega^\omega(2)(u(c_2) + \beta c_T^{2,2}) \\
+ \frac{\phi(1) - \phi(2)}{2}\beta c_T^{1,1} + \frac{\phi(1) - \phi(2)}{2}\beta c_T^{1,no}
\end{aligned} \quad (1)
$$

The first four terms represent the case when the agent is hit either in first or the second wave. The last term represents the consumption when the agents are not hit. The agent's problem may be reduced to the following form:

$$
\begin{aligned}
\max_{l_1, l_2, d} \min_{\theta_\omega^\omega \in [-K,K]} \phi_\omega^\omega(1)u(2l_1 - d) + (\phi(2) - \phi_\omega^\omega(2))\beta R(Z - l_1 - l_2)\gamma_2 \\
+ \phi_\omega^\omega(2)(u(2l_2 + d) + \beta R(Z - l_1 - l_2)(2 - \gamma_2)) + \frac{\phi(1) - \phi(2)}{2}\beta(2R(Z - l_1) + d)
\end{aligned} \quad (2)
$$

The last equation is similar to one that Caballero and Krishnamurthy investigated. The agents choose $\theta_\omega^\omega = K$, so the beliefs are biased towards less likely event to be hit in the second shock. In fact, if Z is large enough, the belief bias doesn't matter. The things are different in the case of *insufficient liquidity*. The results are formulated in the following

Proposition *Agents always choose a priori* $d = 0$.
1) If $Z \geq u'^{-1}(\beta R)$ *(sufficient liquidity) then the agent's problem solution takes the form* $l_1^* = l_2^* = u'^{-1}(\beta R)/2 = l^*$
2) If $Z < u'^{-1}(\beta R)$ *(insufficient liquidity) and* K *is small enough then the solution can be derived from the system:*

$$(\frac{\phi(1)}{2} - K)u'(2l_1) = (\frac{\phi(2)}{2} + K)u'(2(Z - l_1)) + \beta R\frac{\phi(1) - \phi(2)}{2} \tag{3}$$

$$l_2 = Z - l_1 \tag{4}$$

In this case $l^* > l_1 > Z > l_2$. *Moreover,* l_1 *is decreasing function of* K *and* l_2 *is increasing function of* K.

I refer the reader to Caballero and Krishnamurthy (2007) for the proof of the proposition. Here I do not consider the case of large K, because that only complicates computations and is not of interest. To be clear, there is certain $\hat{K}$ such that for $K > \hat{K}$ the solution of agents problem is the same as it is stated in the proposition as if $K = \hat{K}$. The value for $\hat{K}$ can be found from the condition $l_1 = l_2$ and is equal to $\hat{K} = \frac{\phi(1)-\phi(2)}{4}(\frac{u'(Z)-\beta R}{u'(Z)})$. The typical pattern of solution for different Z is depicted in the figure 2.

We see, that γs fell out of consideration. However, they will play some role later.

One should show that agents always choose $d = 0$. For proof see Appendix. Note that the equilibrium was not checked if it is incentive supportive. That is one should check if d will be really zero in period 1, when some of uncertainty reveals. The IC is expected to be an inequality (as it usually is). So, for some values of K and Z one should expect the same solution as if there were no IC constraint. On other hand, if IC constraint is binding, this situation should be taken into account in period 0 before any uncertainty is revealed. It is the moment when l_1 and l_2 are determined and cannot be changed later. One can think about l_1 and l_2 as provisions of liquidity with predetermined maturity. And there is no possibility to transfer provision from l_2 to l_1 (the opposite direction in fact doesn't matter because of sequential structure of shocks). In the following section we will see that in fact $d = 0$ for any K and Z even if IC constraint becomes binding. However, in this case liquidity provisions are distorted.

From now on I denote l_i^* as agent's solution in case $K = 0$ and l_i in case $K > 0$.

The intuition that stays behind this behavior is following. When $K = 0$ intact banks are planning to provide l_1^* for distressed banks if first liquidity shock happens. When uncertainty comes into play ($K > 0$), banks become concerned to be distressed later than earlier. If distressed later, the liquidity is received on worse credit terms than in case when distressed earlier. So, banks agree to lock up some provisions. This liquidity hoarding creates market inefficiency in terms of welfare.

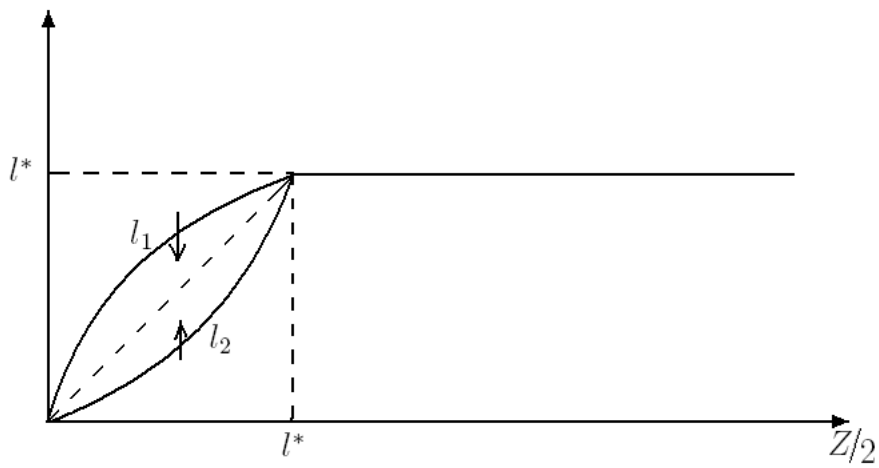

Figure 2. Typical pattern of agent problem solution without taking into account IC constraint. The arrows show the direction where the solution $l_1(Z)$ and $l_2(Z)$ is shifted when K increases.

2.4 Agents' selfish behavior

Selfishness is the assumption about agents' behavior that drive the elaboration of many models. From the behavioristic view the assumption needs to be tested. A lot of work has been done in this direction and some results are discussed in Kahnenan (2003). However, I do not deviate from the conventional view on selfishness in this work. So agents are purely rational in any point of time.

Ambiguity measure K may not be fixed. I assume that K is random variable realized in period -1 and may take positive values that are observable to everyone. Note, that this doesn't mean that agents can correct for the mistake in their believes. The observability of K just make it a common value for each of agents. The case of different extend of ambiguity is discussed later.

Consider the problem that intact agents have in period 1 when first shock realizes. Assume that agents solved their maximization problems in period 0 as if $d = 0$. So, $c_1 = 2l_1$ and $c_2 = 2l_2$. But in period 1 intact agents may make extra demand for liquidity. In this case I assume that the remains of reserves after consumption in period 1 are liquidated. If $Z - l_1 - l_2 > 0$ (sufficient liquidity case), then l_2 is unchanged and the consumption in period T is lowered by $Rd/2$. If $Z - l_1 - l_2 = 0$ (insufficient liquidity case), then the liquidation of long-term reserves is done at expense of l_2. Hence, l_2 is lowered by $d/2$, but $Z - l_1 - d/2 - (l_2 - d/2) = 0$. Consider the following problem:

$$\max_{d \geq 0} \min_{\theta_\omega^\omega \in [-K,K]} \frac{\phi_\omega^\omega(2)}{\phi_\omega^\omega(1)}(u(c_2) + \beta c_T^{2,2}) + (1 - \frac{\phi_\omega^\omega(2)}{\phi_\omega^\omega(1)})\beta c_T^{1,no}$$

subject to

$$c_2 \leq 2l_2 + d$$
$$c_T^{1,no} \leq R(Z - l_1 - \frac{d}{2}) + d$$

The constraint for $c_T^{2,2}$ depends on whether it is sufficient or insufficient liquidity case. In the former case $c_T^{2,2} = const - Rd/2$. In the later $c_T^{2,2} = 0$

The solution can be found from the following equation:
Insufficient liquidity case

$$u'(2l_2 + d) = u'(\bar{c}_2) = \beta(\frac{R}{2}\gamma_1 - 1)(\frac{\phi_\omega^\omega(1)}{\phi_\omega^\omega(2)} - 1)$$

Sufficient liquidity case

$$u'(2l_2 + d) = u'(\bar{c}_2) = \beta((\frac{R}{2}\gamma_1 - 1)(\frac{\phi_\omega^\omega(1)}{\phi_\omega^\omega(2)} - 1) + \frac{R}{2}(2 - \gamma_2))$$

where $\theta_\omega^\omega = K$.

One can see that $\bar{c}_2$ does not depend on Z. To make d the lowest that is possible, one should put $\gamma_1 = 2$ and $\gamma_2 = 0$. Thus, $\bar{c}_2$ monotonically depends on K and $\bar{c}_2 > 0$ for $K = 0$:
Insufficient liquidity case

$$u'(2l_2 + d) = u'(\bar{c}_2) = \beta(R - 1)(\frac{\phi_\omega^\omega(1)}{\phi_\omega^\omega(2)} - 1) \tag{5}$$

Sufficient liquidity case

$$u'(2l_2 + d) = u'(\bar{c}_2) = \beta(R - 1)(\frac{\phi_\omega^\omega(1)}{\phi_\omega^\omega(2)} - 1) + R)$$

Notice, that RHS of the last equation is greater than βR, hence, $\bar{c}_2 < l^*$ for $\forall K > 0$. What does $\bar{c}_2$ mean? For any predetermined l_2 we get $d = \bar{c}_2 - 2l_2$. This is the value of d that is taken into account when agents solve the problem in period 0. In other words, $\bar{c}_2$ is the lowest possible level of consumption in case of second shock that intact agents in period 1 can guarantee to themselves. Now we can restate the agents' problem in period 0 for the case, when IC binds.

New constraints are below:

$$
\begin{aligned}
l_1 + l_2 &\leq Z \\
c_1 &\leq 2Z - c_2 \\
c_2 &\geq \bar{c}_2 \\
c_T^{1,no} &\leq 2R(Z - l_1) + \bar{c}_2 - 2l_2 \\
c_T^{1,1} &= 0 \\
c_T^{0,no} &\leq RZ \\
c_T^{2,1} = c_T^{2,2} &= 0 \\
c_*^*, d, l_1, l_2 &\geq 0
\end{aligned}
$$

The constraints are considered only for insufficient liquidity case. Assuming, that $\bar{c}_2 \leq Z$, one can get $c_1 = 2Z - \bar{c}_2$, $c_2 = \bar{c}_2$. So, the agent must minimize $c_T^{1,no} = 2R(Z - l_1) + \bar{c}_2 - 2l_2$ (see (1)) subject to IC ($c_2 \geq \bar{c}_2$) and $l_1 + l_2 = Z$. l_2 take maximum positive value, that is $l_2 = \frac{\bar{c}_2}{2}$.

When $\bar{c}_2 > Z$, we get $c_1 = 2Z - \bar{c}_2 < Z$. That is distressed agents in period 1 are promised to be payed less that they have (Z). Thus, they would refuse to participate in that kind of arrangement and we say that market breaks down. In this case $c_1 = c_2 = Z$.

In sufficient liquidity case agents choose $l_1 = l_2 = l^*$, that is the level possible even without interbank market[5]. So, one can think that there is no interbank market, there is nothing to insure and there is no one to "steal" from. In sufficient liquidity case IC constraint and the level of ambiguity K don't matter. This is the same result as Caballero and Krishnamurthy get. However, sufficient liquidity case is not interesting at all, since, as it was said earlier, there is no interbank market. Let's look at insufficient liquidity case closer.

We found earlier, that the market essentially breaks down even without taking into account IC constraint. This happens when $K \geq \hat{K}$, where $\hat{K} = \frac{\phi(1)-\phi(2)}{4}(\frac{u'(Z)-\beta R}{u'(Z)})$. This is the result of Caballero and Krishnamurthy. When IC constraint is considered, market breakdown takes place for low enough market liquidity reserves $Z \leq Z_1$. The level of uncertainty $\hat{\hat{K}}$ that breaks the market for predetermined Z can be found from $\bar{c}_2 = Z$:

$$
\hat{\hat{K}} = \frac{1}{2} \frac{\phi(1) - \phi(2)\frac{u'(Z)}{\beta(R-1)}}{1 + \frac{u'(Z)}{\beta(R-1)}}
$$

The comparison between $\hat{K}$ and $\hat{\hat{K}}$ is made graphically on figure 3. Denote $Z_1 = \hat{\hat{K}}^{-1}(K)$. Z_1 is monotonic w.r.t. K.

Making simplifying assumption that two monotonic functions $\bar{c}_2$ and $c_2 = 2l_2$ (from proposition) w.r.t. to K may intersect only once, one may assert, that for $Z \in [Z_1, Z_2]$ and $\forall K \geq 0$ equilibrium c_2 (with IC) is equal to $\bar{c}_2$. For $Z \in [Z_2, u'^{-1}(\beta R)]$ and $\forall K \geq 0$ equilibrium c_2 (with

[5]consider the problem $u(c) + \beta R(Z - c) \rightarrow max_c$

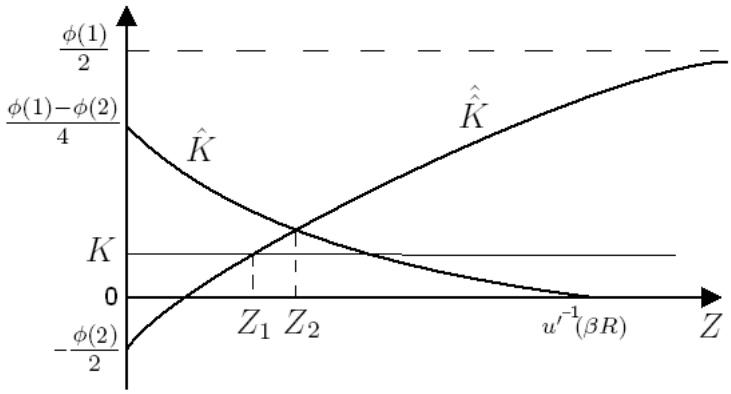

Figure 3. The levels of economic uncertainty when interbank market breaks down. The figure demonstrates threshold levels of uncertainty when interbank market breaks down due to distorted believes ($\hat{K}$) and incentive compatibility constraint ($\hat{\hat{K}}$).

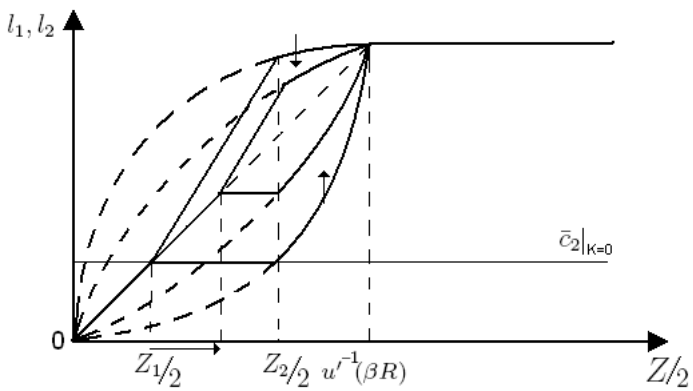

Figure 4. Agent's solution for different realization of K. The figure demonstrates agents choices of withdrawal plan for different realizations of ambiguity parameter K. Arrows show how solution l_1 and l_2 changes when K raises. Market breakdown area becomes larger with K.

IC) is equal to $2l_2$. The equilibrium solution is presented graphically on figure 4.

One can see from figure 4, that as K raises the market breakdown makes more likely, that is Z_1 raises too. Without the simplifying assumption made earlier Z_2 would change with K. Thus, we have much more rich behavior of consumption plan with IC constraint. For low enough level of liquidity provision Z ($< Z_1$) we have market breakdown. This is the result as if each bank managed with the crisis alone. For $Z \in [Z_1, Z_2]$ we see, that bank's selfish behavior prevents interbank market from working properly. The level of liquidity provision for period 2 is constant (over Z) and is too high than it would be without IC constraint or without ambiguity at all (dotted lines), which is even stronger manifestation of flight to quality.

3 Robustness

It is natural to assume, that agents are heterogeneous. In the model proposed here the heterogeneity may come from different levels of liquidity provisions and different levels of ambiguity. In this section I consider the later case. Let's assume for simplicity, that some fraction

ψ has the extend of ambiguity $K > 0$, while the rest of agents has no ambiguity at all ($K = 0$). Both parts find individual optimal levels of consumption $c_1^{\psi}, c_2^{\psi}, c_1^{1-\psi}, c_2^{1-\psi}$ and contribute their own liquidity $l_1^{\psi}, l_2^{\psi}, l_1^{1-\psi}, l_2^{1-\psi}$, so that:

$$c_1 = \psi c_1^{\psi} + (1-\psi)c_1^{1-\psi} \tag{6}$$
$$c_2 = \psi c_2^{\psi} + (1-\psi)c_2^{1-\psi} \tag{7}$$
$$l_1 = \psi l_1^{\psi} + (1-\psi)l_1^{1-\psi} \tag{8}$$
$$l_2 = \psi l_2^{\psi} + (1-\psi)l_2^{1-\psi} \tag{9}$$
$$d = \psi d^{\psi} + (1-\psi)d^{1-\psi} \tag{10}$$

Each part of agent solves problems similar to (1) with the same constraints. First order conditions are:

$$\psi : (\frac{\phi(1)}{2} - K)u'(c_1^{\psi}) = (\frac{\phi(2)}{2} + K)u'(2Z - c_1^{\psi}) + \beta R\frac{\phi(1)-\phi(2)}{2}$$
$$(1-\psi) : \frac{\phi(1)}{2}u'(c_1^{1-\psi}) = \frac{\phi(2)}{2}u'(2Z - c_1^{1-\psi}) + \beta R\frac{\phi(1)-\phi(2)}{2}$$

Thus, each part of agents have the same decision as if all agents were their type because the constraints (6)-(10) are linear w.r.t. c_*^* and l_*^*. We have: $l_1^{1-\psi} = l_1^*$ and $l_1^{\psi} = l_1$.

Now consider the IC constraints. For part ψ: $c_2^{\psi} \geq \bar{c}_2(K)$; for part $1-\psi$: $c_2^{1-\psi} \geq \bar{c}_2(0)$. It is also known, that $\bar{c}_2$ is monotonic w.r.t. K. So, IC constraint is more restrictive for the part of agents with ambiguity. When IC constraint comes into play for this part of agents, they distort their consumption plan as it is described in figure 4. Nevertheless, constraints (6)-(10) are satisfied.

As a result, we have that for agents with ambiguity it is more likely that they will refuse to participate in interbank market insuring their consumption. Thus, market may break partially. The consumption schedule for the economy as a whole is linear combination of the schedules of both types of agents.

4 The role of central bank

In previous sections I demonstrated the consequences of collective distortion of beliefs. We saw that in case of insufficient liquidity market breakdown is possible. And even if the breakdown doesn't happen, then the provisions of liquidity is distorted causing total wealth to decrease. In this section I will analyze the role of central bank (CB). This credible organization may promise to add or remove liquidity from the economy via the banking system (open market operations, discount window or special requirements for banks). Similar to Caballero and Krishnamurthy I will analyze the case when CB adds liquidity (Z^G) in period 2 when shock

realizes. As a government structure, CB doesn't intend to make any profit or losses. So, unlike Caballero and Krishnamurthy, I also assume that CB removes some liquidity in period T if no shock occur and, as a result, has zero expected profit. In that way CB redistributes liquidity in time. The agents face new budget constraints:

$$\begin{aligned}
l_1 + l_2 &\leq Z \\
\frac{c_1}{2} + \frac{d}{2} &\leq l_1 \\
\frac{c_2}{2} &\leq l_2 + \frac{d}{2} + Z^G \\
c_T^{1,no} &\leq R(Z - l_1)\gamma_1 + d \\
c_T^{1,1} &\leq R(Z - l_1)(2 - \gamma_1) \\
c_T^{2,1} &\leq R(Z - l_1 - l_2)\gamma_2 \\
c_T^{2,2} &\leq R(Z - l_1 - l_2)(2 - \gamma_2) \\
c_T^{0,no} &\leq R(Z - \frac{\phi(2)}{1 - \phi(1)} Z^G) \\
c_*^*, d, l_1, l_2 &\geq 0 \\
\gamma_{1,2} &\in [0, 2]
\end{aligned}$$

To gauge the effect of central bank's policy one should calculate how Z^G influence total agents' welfare given in (1). It is interesting to investigate the case of insufficient aggregate liquidity, because only in this case we observe inefficiency. Total agents wealth is:

$$U = \frac{\phi(1)}{2} u(c_1) + \frac{\phi(2)}{2} u(c_2) + \frac{\phi(1) - \phi(2)}{2} \beta R c_T^{1,no} + (1 - \phi(1)) \beta c_T^{0,no}$$

For simplicity the marginal effect of adding liquidity is measured. Consider three cases with $Z \leq Z_1$, $Z \in [Z_1, Z_2]$ and $Z \in [Z_2, u'^{-1}(\beta R)]$:
1) $Z \in [Z_2, u'^{-1}(\beta R)]$.
In this case we get:

$$\frac{\partial U(Z^G)}{\partial Z^G}|_{Z^G=0} = \frac{\phi(1)}{2} u'(c_1) \frac{\partial c_1}{\partial Z^G} + \frac{\phi(2)}{2} u'(c_2) \frac{\partial c_2}{\partial Z^G} + \frac{\phi(1) - \phi(2)}{2} \beta \frac{\partial c_T^{1,no}}{\partial Z^G} + (1 - \phi(1)) \frac{\partial c_T^{0,no}}{\partial Z^G}$$

Substituting from (3) for $u'(c_1)$ we get:

$$\begin{aligned}
\frac{\partial U(Z^G)}{\partial Z^G}|_{Z^G=0} = \frac{\phi(2)}{2} u'(c_2) \frac{\partial (c_1 + c_2)}{\partial Z^G} + \frac{\phi(1) - \phi(2)}{2} \beta \frac{\partial (R c_1 + c_T^{1,no})}{\partial Z^G} \\
+ K(u'(c_1) + u'(c_2)) \frac{\partial c_1}{\partial Z^G} + (1 - \phi(1)) \frac{\partial c_T^{0,no}}{\partial Z^G} \quad (11)
\end{aligned}$$

From the budget constraint we have: $\frac{\partial (R c_1 + c_T^{1,no})}{\partial Z^G} = 0$, $\frac{\partial (c_1 + c_2)}{\partial Z^G} = 2$ and $\frac{\partial c_T^{0,no}}{\partial Z^G} = -R \frac{\phi(2)}{1 - \phi(1)}$.

Hence,

$$\frac{\partial U(Z^G)}{\partial Z^G}|_{Z^G=0} = \phi(2)(u'(c_2) - \beta R) + K(u'(c_1) + u'(c_2))\frac{\partial c_1}{\partial Z^G} > 0$$

The first item is positive, because this is the case of insufficient liquidity. The second item is not negative, because $K \geq 0$ and $\frac{\partial c_1}{\partial Z^G} > 0$. The last inequality follows from differentiating (3) w.r.t. Z^G. It also follows that $\frac{\partial c_2}{\partial Z^G} > 0$, hence, $\frac{\partial c_1}{\partial Z^G} \in (0, 2)$

2) $Z \in [Z_1, Z_2]$.

In this case agents choose $c_2 = \bar{c}_2$, so that intact agents in first period are indifferent whether to "steal" some liquidity or not. Equation (5) should be rewritten as

$$u'(2l_2 + d + 2Z^G) = u'(\bar{c}_2) = \beta(R-1)(\frac{\phi^\omega_\omega(1)}{\phi^\omega_\omega(2)} - 1)$$

Differentiating the last equation w.r.t. Z^G one can get: $\frac{\partial(2l_2+d)}{\partial Z^G} = -2$. Also $\bar{c}_2$ doesn't change (and c_2 doesn't change too), positive Z^G allows agents to increase l_1 in period 0. In other words, intact agents in period 1 would rather "steal" Z^G then from distressed agents. Knowing that in any case $d = 0$ we have: $\frac{\partial 2l_2}{\partial Z^G} = -2 \Rightarrow \frac{\partial 2l_1}{\partial Z^G} = \frac{\partial c_1}{\partial Z^G} = 2$. Hence,

$$\frac{\partial U(Z^G)}{\partial Z^G}|_{Z^G=0} = \phi(2)(u'(c_2) - \beta R) + 2K(u'(c_1) + u'(c_2)) > 0$$

The last equation is similar to one in part 1). One can assert that in case, when $Z \in [Z_1, Z_2]$, central bank's measures of adding liquidity are more effective than in case $Z \in [Z_2, u'^{-1}(\beta R)]$. Indeed, both summands in RHS of the last equation are greater then the ones in part 1). Thus, when selfish behavior comes into play, central bank may even more effectively influence the system.

3) $Z \in (0, Z_1)$.

In this case we have market breakdown. Adding liquidity in period 2 won't change anything. Distressed agents in period 1 doesn't get anything $\Rightarrow \frac{\partial c_1}{\partial Z^G} = 0, \frac{\partial c_T^{1,no}}{\partial Z^G} = 0$, distressed agents in period 2 get $2Z^G \Rightarrow \frac{\partial c_2}{\partial Z^G} = 2$. Following (11):

$$\frac{\partial U(Z^G)}{\partial Z^G}|_{Z^G=0} = \phi(2)(u'(c_2) - \beta R) > 0$$

It is interesting to compare the results in parts 1), 2) and 3). Following the idea in Caballero and Krishnamurthy, denote $\frac{\partial U^{direct}(Z^G)}{\partial Z^G} = \phi(2)(u'(c_2) - \beta R)$ as direct wealth effect of adding liquidity. We see, that for $Z \in [Z_1, u'^{-1}(\beta R)]]$ we have additional indirect effect, which is positive only for $K > 0$: $\frac{\partial U^{indirect}(Z^G)}{\partial Z^G} = K(u'(c_1) + u'(c_2))\frac{\partial c_1}{\partial Z^G}$.

Why should the central bank add liquidity only in period 2? Let's investigate the case, when the central bank adds liquidity whenever first shock happens. New budget constraints

take the following form:

$$\frac{c_1}{2} + \frac{d}{2} \leq l_1 + Z^G$$
$$\frac{c_2}{2} \leq l_2 + \frac{d}{2}$$
$$c_T^{0,no} \leq R(Z - \frac{\phi(1)}{1-\phi(1)} Z^G)$$
$$c_*^*, d, l_1, l_2 \geq 0$$

In this case one can call the direct effect from adding liquidity: $\frac{\partial U^{direct}(Z^G)}{\partial Z^G} = \phi(1)(u'(c_1) - \beta R)$. This is the marginal effect of adding liquidity when market breaks down. From the budget constraints we have: $\frac{\partial(Rc_1 + c_T^{1,no})}{\partial Z^G} = 2R$, $\frac{\partial(c_1+c_2)}{\partial Z^G} = 2$ and $\frac{\partial c_T^{0,no}}{\partial Z^G} = -R\frac{\phi(1)}{1-\phi(1)}$. Equation (11) gives:

$$\frac{\partial U(Z^G)}{\partial Z^G}|_{Z^G=0} = \phi(2)(u'(c_2) - \beta R) + K(u'(c_1) + u'(c_2))\frac{\partial c_1}{\partial Z^G} > 0$$

With the use of (3) one can get:

$$\frac{\partial U(Z^G)}{\partial Z^G}|_{Z^G=0} = \frac{\partial U^{direct}(Z^G)}{\partial Z^G} + K(u'(c_1) + u'(c_2))(\frac{\partial c_1}{\partial Z^G} - 2) < \frac{\partial U^{direct}(Z^G)}{\partial Z^G}$$

Thus, the central bank creates *negative* indirect effect from additional liquidity. It is even hot obvious that total effect is positive. This is similar effect, that Caballero and Krishnamurthy get. It is interesting to note, that in case, when IC constraint binds ($Z \in [Z_1, Z_2]$), we have zero indirect effect.

Consequently, early bank intervention creates no additional wealth effect but the direct one. When there is ambiguity among agents in the economy, there is even impairment of central bank policy. The late intervention not only creates positive indirect wealth effect, but also allows the central bank to add liquidity more rarely. That fact justifies the central bank's role as a lender of *last* resort.

5 Contagion

Financial contagion refers to the phenomenon when the problems in one part of the financial system (e.g. country, region, industry, several banks) causes the problems in other part. The model proposed in this paper may partly explain this phenomenon via ambiguity aversion channel. In case of insufficient liquidity general agents' anxiety to be hit later creates incentives to lock up some liquidity for the case when second liquidity shock realizes. The contagion effect makes more apparent, when agents are more tightened with liquidity reserves ($Z \in [Z_1, Z_2]$). The insurance equilibrium partially breaks down because of selfish behavior of intact agents during the first shock. They demand liquidity durinh the first shock. This is the effect that Scholes (2000) is talking about, when natural liquidity providers (leveraged investors, that hedge their risk exposures) become liquidity consumers as in the case of August 1998. He argues, that

it is liquidity risk, not credit one, that kept market spreads (LIBOR-reverse REPO) too wide.

Besides general inefficiency of liquidity distribution over time, great ambiguity makes market breakdown more likely event. This is expressed as the fact that Z_1 is monotonic functions of K. When agents are very tightened with liquidity provisions ($Z < Z_1$), the possibility of selfish behavior take away market participants from the interbank market. And each agent protects itself alone.

The role of financial regulator as a lender of last resort is justified in previous section. As a government institution that has high credibility, it has the possibility to alleviate the crisis at zero expected cost.

6 Conclusions

Under insufficient liquidity, banks use interbank market for insurance against undesirable events. The fact, that liquidity shocks are unobservable, introduces rather sophisticated behavior of economic agents. Liquidity market may totaly or partially break down or just be affected by ambiguity aversion. Particular behavior depends both on the initial aggregate level of liquidity in the economy and the level of uncertainty. If liquidity provision is too scarce ($Z < Z_1$), the market cannot work properly and vanishes even with no ambiguity at all. More liquidity provision ($Z_1 \leq Z < Z_2$) may partially revive the market, however, uncertainty may break it down again. Additional liquidity ($Z_2 \leq Z \leq u'^{-1}(\beta R)$) discourages selfish behavior of agents further and reduces the flight to quality effect. In this case we have the same conclusion as Caballero and Krishnamurthy get, that is flight to quality and ineffective liquidity distribution.

It appears, that policy implication are the same, as in Caballero and Krishnamurthy (2007). Acting as a lender of last resort the central bank may reduce the distortion caused by agent's ambiguity aversion unless the market is totaly broken down ($Z < Z_1|_{K=0}$). It costs nothing for the central bank to add liquidity in case of severe crisis and remove small amount of liquidity when the economy is stable. Besides the direct effect of this policy (that follows from central bank's risk neutrality), it is the indirect effect that is worth consideration. It can be either positive or negative depending on timing of adding liquidity. The necessary prerequisites for the positive effect of central bank intervention are a bit different from those that Caballero and Krishnamurthy find (assuming the level of uncertainty $K > 0$):

- no effect for $0 < Z < Z_1|_{K=0}$
- may be positive for $Z_1|_{K=0} < Z < Z_1|_{K>0}$ if infusion is great enough
- positive for $Z_1|_{K>0} < Z < Z_2|_{K>0}$ and even greater than Caballero and Krishnamurthy find
- positive for $Z_2|_{K>0} < Z < u'^{-1}(\beta R)$, the same as Caballero and Krishnamurthy find

The model shows that with certain parameters the agents behave selfishly and are able to harm the economy. In period 1 when first shock happens the intact agents have incentives to

withdraw more than they should to. Thus, although intact, they switch to the role of liquidity consumers, and the contagion occur. The effect is magnified assuming that liquidity shocks are not observable.

Caballero and Krishnamurthy point out at flight to quality effect. This effect is present in my model too. Indeed, when $K > 0$ and beliefs are distorted, the agents put aside some liquidity for a "rainy" day and are planning to consume more in period 2 if shock realizes. The effect will not disappear if only some part of the agents become uncertain.

7 Appendix

Consider two cases of sufficient and insufficient liquidity.

1) Sufficient liquidity. Take first derivative w.r.t. d of target function of agent's problem (1) bearing in mind that in case of sufficient liquidity one must set $\theta_\omega^\omega = 0$ as if $K = 0$:

$$-\phi_\omega^\omega(1)u'(2l_1 - d) + \phi_\omega^\omega(2)u'(2l_2 + d) + \frac{\phi(1) - \phi(2)}{2}\beta \tag{12}$$

Substituting $u'(2l_1 - d) = u'(2l_2 + d) = \beta R$ we get that (12) is negative ($R > 1$). So, there is corner solution $d = 0$.

2) Insufficient liquidity. In this case l_1 can be found from (3):

$$\phi_\omega^\omega(1)u'(2l_1 - d) - \phi_\omega^\omega(2)u'(2l_2 + d) = \frac{\phi(1) - \phi(2)}{2}\beta R$$

Substituting the LHS of the last equation in (12), one can get negative sign, hence, $d = 0$.

References

[1] Allen, F., E. Carletti, 2007, "Banks, Markets and Liquidity," presented at the Sixth BIS Annual Conference on Financial System and Macroeconomic Resilience, published in *The Structure and Resilience of the Financial System*, Reserve Bank of Australia

[2] Allen, F., D. Gale, 2000, "Financial Contagion," *Journal of Political Economy 108:1*, 1-33

[3] Allen, F., D. Gale, 2007, "An Introduction to Financial Crises," *prepared for the volume on Financial Crises - The International Library of Critical Writings in Esonomic Series, Edward Elgar, UK*

[4] Caballero, R.J., A. Krishnamurthy, 2007, "Collective Risk Management in a Flight to Quality Episode," *Forthcoming: Journal of Finance*

[5] Caballero, R.J., A. Krishnamurthy, 2004, "Smoothing Sudden Stops," *Journal of Economic Theory 119*, 104-127

[6] Chang, R., A. Velasco, 1998, "Financial Crises in Emerging Markets: A Canonical Model," *NBER Working Paper No. 6606*

[7] Diamond, D.W., P.H. Dybvig, 1983, "Bank Runs, Deposit Insurance, and Liquidity," *Journal of Political Economy 91*, 401-419

[8] Epstein L.G., 2001, "Sharing Ambiguity," *The American Economic Review 91:2*, 45-50

[9] Epstein L.G., T. Wang, 1994, "Intertemporal Asset Pricing under Knightian Uncertainty," *Econometrica 62:2*, 283-322

[10] Gilboa, I., D. Schmeidler, 1989, "Maxmin Expected Utility With Non-unique Prior," *Journal of Mathematical Economics 18*, 141-153

[11] Gorton, G., A. Winton, 2002, "Financial Intermediation," *NBER Working Paper No. 8928*

[12] Kahneman, D., 2003, "A Psychological Perspective on Economics," *The American Economic Review 93:2*, 162-168

[13] Scholes, M., 2000, "Crisis and Risk Management," *American Economic Review 90:2*, 17-21